Experiment 4

Electromagnetism

SAFETY

Make sure that you have read the **General Safety Notes**, in the Introductory section of this manual, before you begin.

Do not, **under any circumstances** attempt to repair any of the equipment. If you suspect equipment to be faulty, turn it off at the power point and talk to your demonstrator.

WARNING – HOT

The wire used in the "Magnetic Field Lines" experiment and the coil used in the "Current Balance" experiment will both become very hot. Be sure that you **do not touch** the wire or the coil.

Outline of Laboratory Exercise

Today you will investigate the behaviour of magnetic fields, the magnetic force on moving electrons, electromagnets, and examples of magnetic induction. There are several small exercises – try not to take too much time with any particular one, because there is a limited time to get through them all.

Before attempting this lab read the Hyperphysics pages on magnetic fields & bar magnets

http://hyperphysics.phy-astr.gsu.edu/hbase/magnetic/magfie.html

http://hyperphysics.phy-astr.gsu.edu/hbase/magnetic/magcur.html

http://hyperphysics.phy-astr.gsu.edu/hbase/magnetic/elemag.html

and pages on magnetic flux, Faraday's Law & Lenz's Law

http://hyperphysics.phy-astr.gsu.edu/hbase/magnetic/fluxmg.html

http://hyperphysics.phy-astr.gsu.edu/hbase/electric/farlaw.html

✓ ***Pre-lab exercises****: Read the laboratory exercise, then complete the online prelab questions.*

Learning Goals

- To use vector relationships to determine the direction of a field.
- To use a compass to measure the direction of a magnetic field and make conclusions about the field itself.
- To explore magnetic fields generated by current carrying wires in a number of situations.
- To develop an understanding of the nature of magnetism.

Magnetic Fields Produced by Bar magnets

You will be provided with two magnets and a small compass. The compass has a magnetic needle that is free to rotate: placing the compass at some point near the other magnets, the direction of its needle will indicate the direction of the total magnetic field at that point.

Before you begin, check that your compass is working properly. With all magnets kept away from the compass, the needle should point North. However, small compasses sometimes get their poles reversed – it may instead point South. If there seems to be a problem, see your demonstrator. **Some of the compasses may just not be very good. Do the best you can; look closely for small changes in the direction of the needle for an indication of changing magnetic fields.**

When you have calibrated your compass needle, use it to determine which ends of your magnets are North and which are South.

Next, you should have a grid similar to the one on the right:

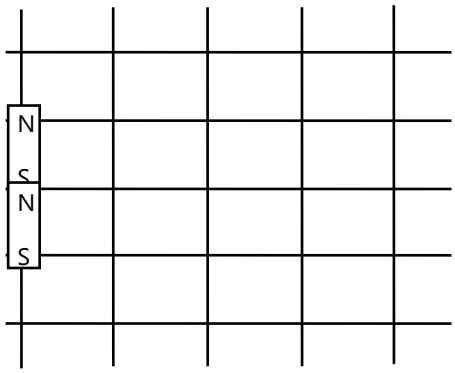

With the magnets arranged on the grid as shown, the magnetic field to the right of the magnets (where the grid is) should be a symmetrical mirror image of the field to the left of the magnets.

Procedure

- Use your compass needle to determine the direction of the magnetic field at each grid point, and sketch that direction on the grid. (**This is not supposed to be a precise measurement, so don't spend too much time on this.**)

Analysis

- A compass needle cannot measure the magnitude of the magnetic field, but by finding its direction at many points we can map the direction of the field. When you have mapped the field across the whole grid, sketch the magnetic field lines. By convention, field lines go from North to South (i.e. the same direction as the compass needle).
- What are some possible reasons for any discrepancy?

Magnetic Fields Produced by Electric Current

Magnets are not the only objects that create magnetic fields – for instance, electrical current produces a magnetic field. In a laboratory environment there may be many different sources of magnetic field. The net magnetic field at any point will be the vector sum of all the magnetic fields present at that point: i.e. the Earth's global magnetic field in addition to any local fields (from electrical devices, nearby magnetic materials, etc).

Procedure

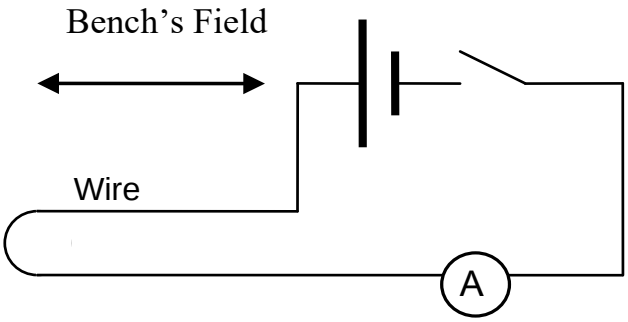

- Using your compass, find the direction of the net magnetic field at your bench.
- Connect the wire on your bench to its power supply, including a switch and an ammeter in the circuit.

SAFETY WARNING

The power supply has been pre-calibrated so that you may not draw more than 4A at any voltage - **DO NOT INCREASE THE CURRENT BEYOND THIS** or else this may no longer be true and you might destroy the equipment through excess power draw. Too much current and the wire will become dangerously HOT

Do **not** leave the power on when not making observations – you should **turn it off** when not in use to let the wire cool down.

Lastly, **make sure** that you are using an **ammeter** (not a micro-ammeter) placing this much voltage across a micro-ammeter will destroy it.

- Align the wire with the 'natural' magnetic field that was at your bench already (according to your compass before).
- Turn on the power supply (but note the **Safety Warning** above – beware of the hot wire). With the switch open (i.e. no current through the wire), place the wire straight across the top of the compass, in line with the compass needle. Close the switch for short periods of time (allowing current through the wire) to observe the effect on the total field.
- Now reverse the flow of current through the wire. Record what happens.
- Now place the wire **underneath** the compass. Record what happens.
- Holding the switch closed (so that current is flowing), slowly reduce the voltage to zero. Record what happens to the magnetic field

Analysis

- Discuss magnetic field direction before the application of current? Is it pointing to Geographical North?
- What does the compass needle do? While current is flowing, what is the direction of the **total** magnetic field?
- What happens to the compass and to the total magnetic field when the current is reversed? Explain.

Hint: consider the total magnetic field as a vector sum of the Earth's magnetic field and the field due to the current in the wire.

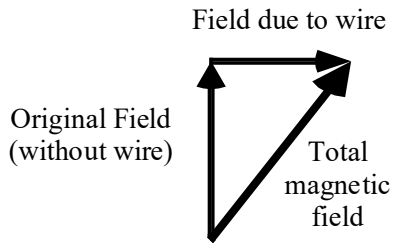

- Does placing the wire underneath the compass make a difference to the field? Explain how and why.
- What do you think will happen to the field as the current is reduced? Does reality match your prediction? (If not, why not? Explain.)

Part B *Induced Voltages and Currents*

Moving charges will produce a local magnetic field, but the reverse is also true – a changing magnetic field will similarly **induce** charges to move (i.e. produce current). Consider a magnet moving into a coil of wire:

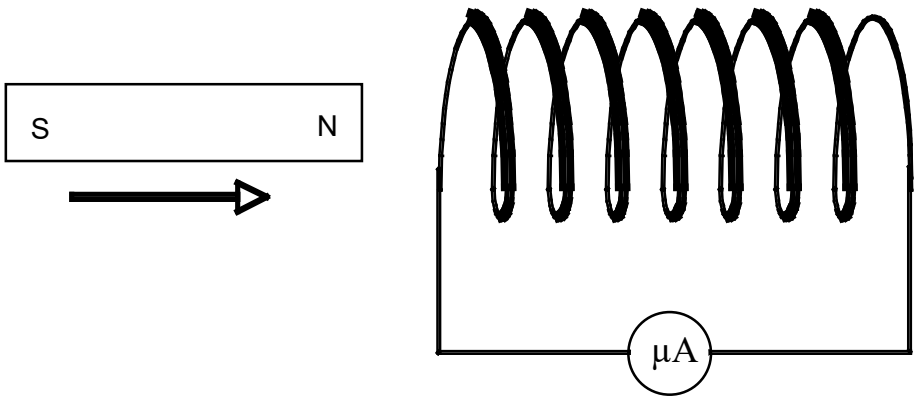

A spiral coil of wire with many closely-spaced turns – this is called a **solenoid** – is connected to a micro-ammeter as shown in the diagram above. As the magnet moves into the coil, any induced current will be measured by the micro-ammeter.

SAFETY WARNING

Do **not** place any external voltage source such as a power supply across the micro-ammeter. It is exceptionally sensitive and will be destroyed if overloaded.

Procedure

- Observe the micro-ammeter as you push the magnet into the coil, North end first (as shown above). Record what happens.
- Push the magnet into the solenoid, S-pole first. Observe/record the behaviour of the micro-ammeter.
- Now remove the (S-pole first) magnet and observe the behaviour of the micro-ammeter.
- Try moving the magnet at different speeds into and out of the coil, and turning the magnet around South-first instead of North-first. Describe what happens.

Analysis

- What causes the current to flow in the circuit?
- Does Lenz's Law correctly predict the current flow that you observed in your solenoid? Explain.
- Of the four basic possibilities – N-pole first in, N-pole first out again, S-pole first in, S-pole first out again – which are equivalent, and why?
- How do the signals change as the magnet speed changes? Does Faraday's Law explain this? Explain how.

Conclusion

Summarise your findings and how well they compare with the theory.